REV.	ECO/DDC	DESCRIPTION	DATE	DRAFT	CHECK	APV'D
A	08107	RELEASED	07-09-01	L.B.G.	S.N.	V.J.C.

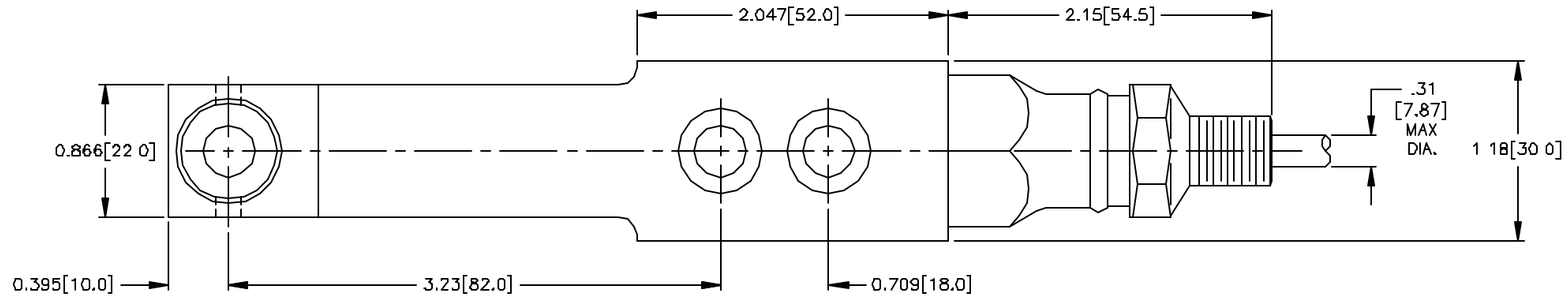

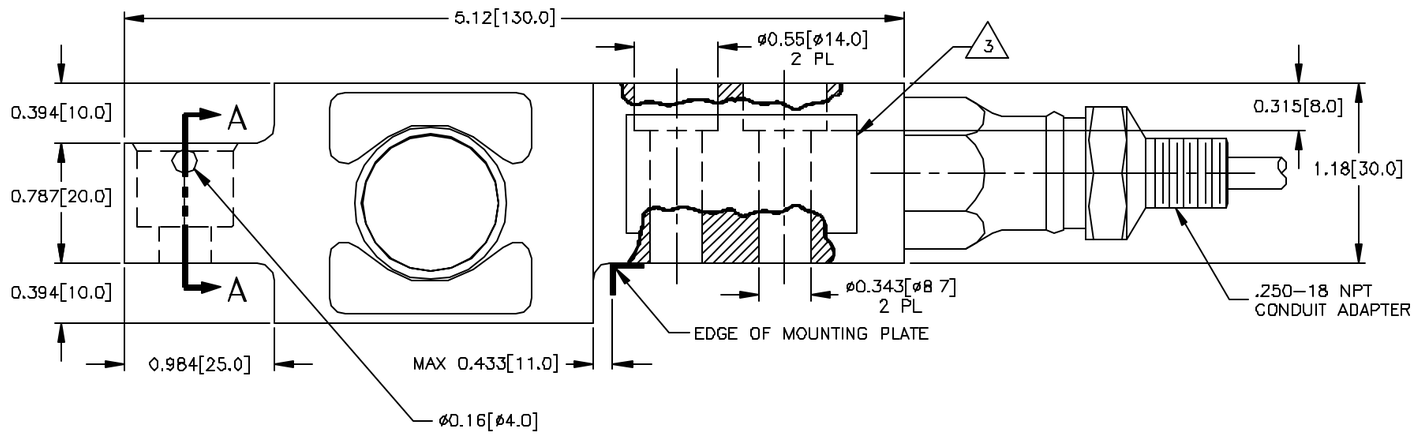

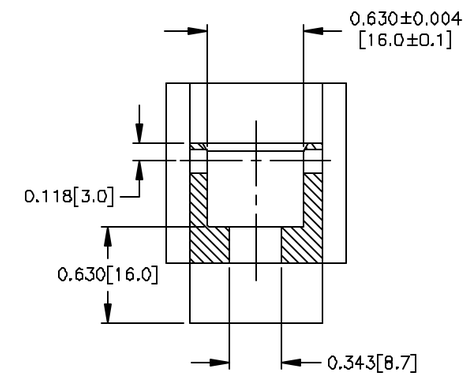

VIEW A–A

9. MOUNTING BOLTS .312-24UNF [M8 8.8] TORQUE 18.4 FT LBS [25 Nm].

8. TOLERANCES: ±0.010 [0 25] UNLESS OTHERWISE STATED.

7. THIS DRAWING IS SUBJECT TO CHANGE WITHOUT NOTICE.

6. CABLE IS 6 CONDUCTOR, SHIELDED AND 10 FT. IN LENGTH CABLE SHIELD IS FLOATING.

5. C2 WIRE COLOR CODE FLAG LABEL, PN 0530-0594, IS FOUND APPROX. 10 IN. FROM END OF CABLE.

EXCITATION +	RED
EXCITATION –	BLACK
SIGNAL +	GREEN
SIGNAL –	WHITE
C2 +	GRAY
C2 –	VIOLET
SHIELD	YELLOW

4. CABLE WIRE ENDS ARE STRIPPED BACK 0.5 IN. AND TINNED. CABLE JACKET IS STRIPPED BACK APPROX. 5 IN.

3. LOCATION OF SERIAL NUMBER LABEL, PN 0530-0345-XX.

2. MATERIAL. LOAD SENSOR- STAINLESS STEEL 17-4PH (1.4548).
FITTINGS- ELECTRO POLISHED STAINLESS STEEL 316.

1. RATED OUTPUT: 2mV/V ±0.002.

NOTES: UNLESS OTHERWISE SPECIFIED

CAPACITY LBS [kg]	MODEL NUMBER	PART NUMBER
44 [20]	HI BBH06-44	0554-0009-01
110 [50]	HI BBH06-110	0554-0009-02

CAPACITY LBS [kN]	MODEL NUMBER	PART NUMBER
225 [1]	HI BBH06-225	0554-0009-03
450 [2]	HI BBH06-450	0554-0009-04

ITEM	QTY	PART NUMBER	DESCRIPTION	COMMENTS
		0588-0083	OUTLINE DRAWING, LOAD SENSOR, HI BBH06 SERIES	

PARTS LIST

UNLESS OTHERWISE SPECIFIED DIMENSIONS ARE IN INCHES
TOLERANCES ARE:
FRACTIONS: N/A
DECIMALS: .XX AND .XXX = ±.010
ANGLES: N/A

MATERIAL

FINISH

DO NOT SCALE DRAWING

CONTRACT NO.

APPROVALS		
DRAWN	R. BILEK	DATE 08-11-99
CHECKED	L. OFTEDAHL	DATE 09-02-99
APPROVED	T. KOPCZYNSKI	DATE 09-23-99
ISSUED	K. McNULTY	DATE 09-23-99
PRODUCTION		DATE

HARDY INSTRUMENTS

TITLE
OUTLINE DRAWING, LOAD SENSOR, HI BBH06 SERIES

SIZE	FSCM	DRAWING NO	REV.
D	21316	0588-0083	A

FILE NAME 58808341.DWG | SCALE NONE | SHEET 1 OF 1

PROPRIETARY NOTICE
ALL DATA AND INFORMATION CONTAINED IN OR DISCLOSED BY THIS DOCUMENT IS CONFIDENTIAL AND PROPRIETARY INFORMATION OF HARDY INSTRUMENTS INC. AND ALL RIGHTS THEREIN ARE EXPRESSLY RESERVED. BY ACCEPTING THIS MATERIAL THE RECIPIENT AGREES THAT THIS MATERIAL AND THE INFORMATION CONTAINED THEREIN IS HELD IN CONFIDENCE AND IN TRUST AND SHALL NOT BE USED, COPIED, REPRODUCED IN WHOLE OR IN PART, NOR ITS CONTENTS REVEALED IN ANY MANNER TO OTHERS, EXCEPT TO MEET THE SPECIFIC PURPOSE FOR WHICH IT WAS DELIVERED.